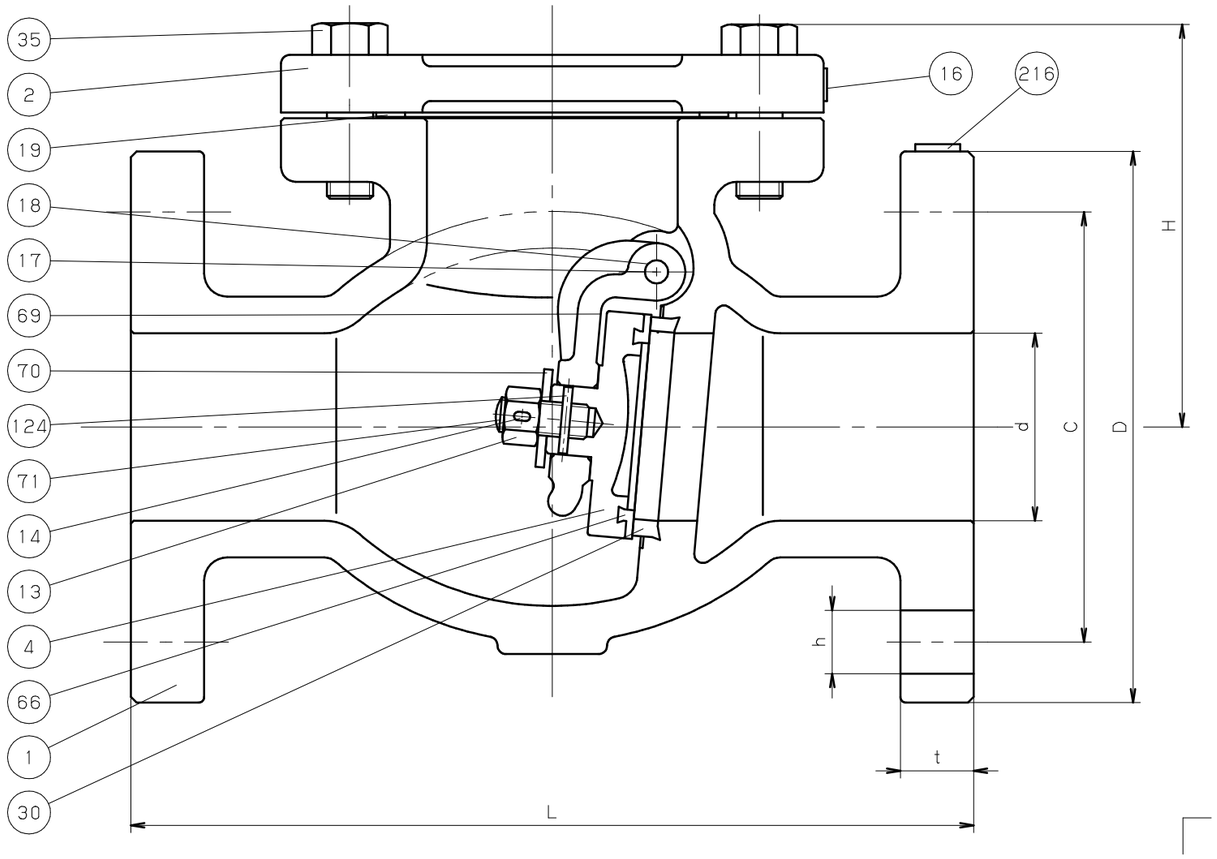

NO	NAME OF PARTS	QTY	MATERIALS	SPECIFICATIONS
1	BODY	1	CAST IRON	ASTM A126-B
2	COVER	1	CAST IRON	ASTM A126-B
4	DISC	1	CAST IRON	ASTM A126-B
13	DISC NUT	1	STEEL	ASTM A573
14	SPLIT PIN	1	STAINLESS STEEL	ASTM A473 304
16	NAME PLATE	1	STAINLESS STEEL	
17	HINGE PIN	1	STAINLESS STEEL	ASTM A473 304
18	PLUG	1	BRASS	ASTM B16
19	GASKET	1	GRAPHITE	NON-ASBESTOS
30	BODY SEAT RING	1	CAST BRONZE	ASTM B62
35	COVER BOLT	1S	STEEL	ASTM A573
66	DISC SEAT RING	1	CAST BRONZE	ASTM B62
69	ARM	1	DUCTILE IRON	ASTM A536 65-45-12
70	WASHER	1	STEEL	ASTM A573
71	DISC BOLT	1	STEEL	ASTM A573
124	PIN	1	STAINLESS STEEL	ASTM A473 304
216	PLATE	1	STAINLESS STEEL	
			1S=1 SET	

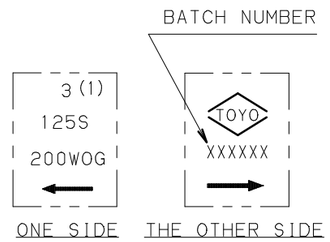

MARKING ON THE BODY

DIMENSIONS UNIT;mm

NOMINAL SIZE NPS	NOMINAL SIZE DN	d	H	L	END FLANGE (2) D	BOLT HOLE C	BOLT HOLE NO.	BOLT HOLE h	(2) t	APPROX. MASS (kg)	
2	50	50	112	203	152	120	4	19	15.9	10	
2.1/2	65	65	132	216	178	140	4	19	17.5	14	
3	80	80	141	241	190	150	8	19	19.1	19	
4	100	100	162	292	229	175	8	19	23.9	33	
5	125	125	192	330	254	210	8	23	23.9	49	
6	150	150	211	356	279	240	8	23	25.4	64	
8	200	200	270	495	343	290	12	23	28.6	112	
10	250	250	316	622	406	355	12	25	30.2	190	
12	300	300	357	699	483	400	16	25	31.8	247	

NOTE (1) VALVE SIZE (NPS) IDENTIFICATION.
(2) "D" "t" SHALL BE IN ACCORDANCE WITH ASME B16.1 CLASS 125.

STANDARD		
	FACE TO FACE OR END TO END	ASME B16.10 CLASS 125
	END CONNECTION	JIS B2239 10K
	WALL THICKNESS	ASME B16.1 CLASS 125
	PRESSURE TEST	MANUFACTURERS STANDARD
	PRODUCT CODE	430AF
	FIGURE	EA125-FNSF10KFF<GA101>

SWING CHECK VALVES

BOLTED COVER, FLANGED ENDS.

DATE APPD	DEC.18.'18	DRAWING NO	△		
APPD BY	H. NAKAGAWA	R11-A00337	△		
CHKD BY	K. NAKAMURA		△		
DSGND BY	K. HAYASHI		△		
DRAWN BY	S. AMANO	REV-00	MARK	DATE	BY

Toyo Valve/ KITZ Corp.